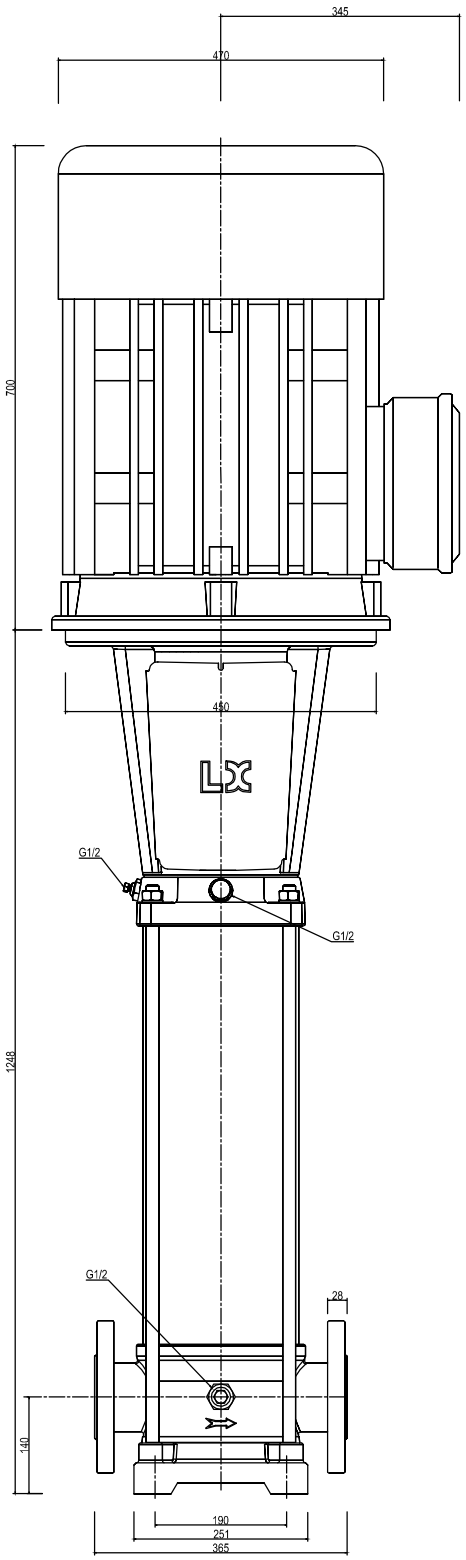


F(DIN)
PN 25-40 (DN100)
/mm/

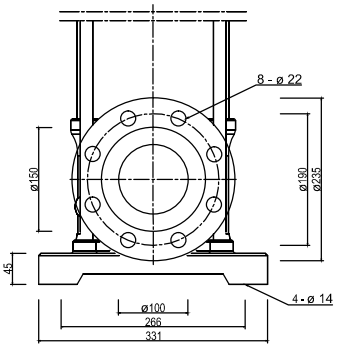


F(DIN)
PN16 (DN100)
/mm/

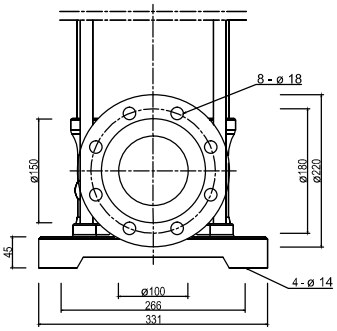


| BV 64-8-2 | | |
|---|---|---|
| PUMPS | 07.07.2020 | BAKALÁR PUMPS® |
| Textilná 3/A | | |
| 040 12 Košice | | |