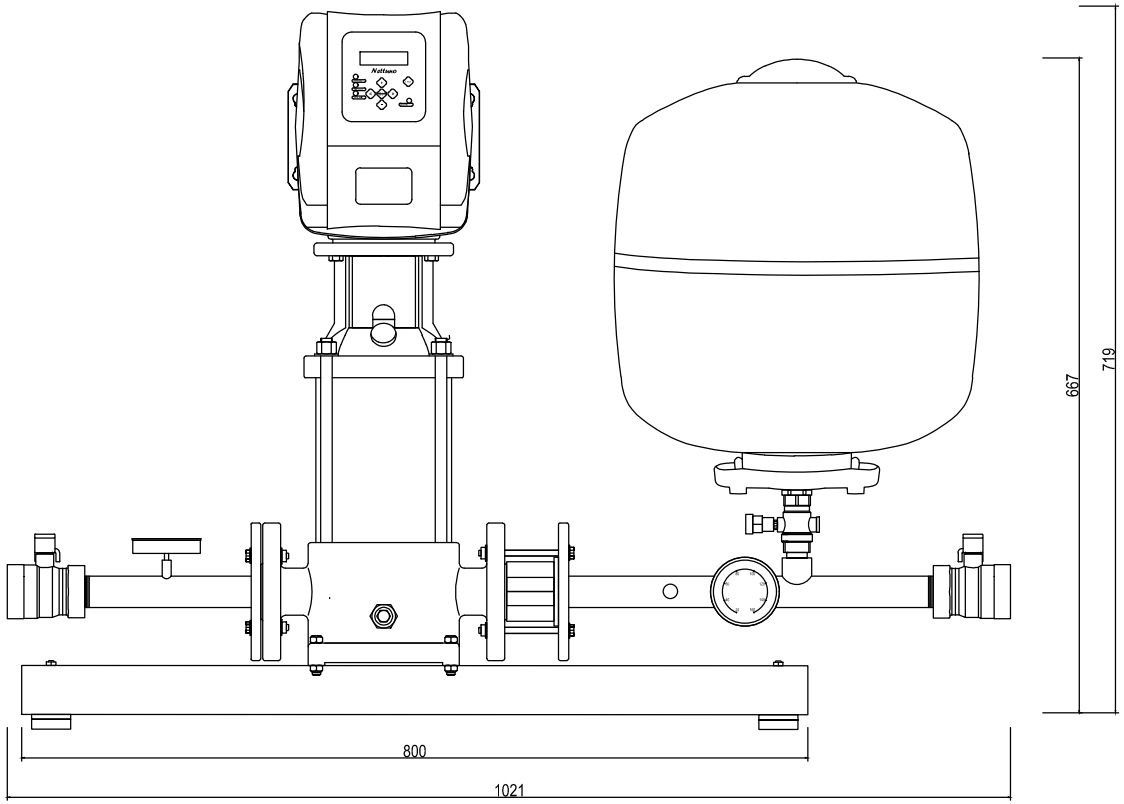

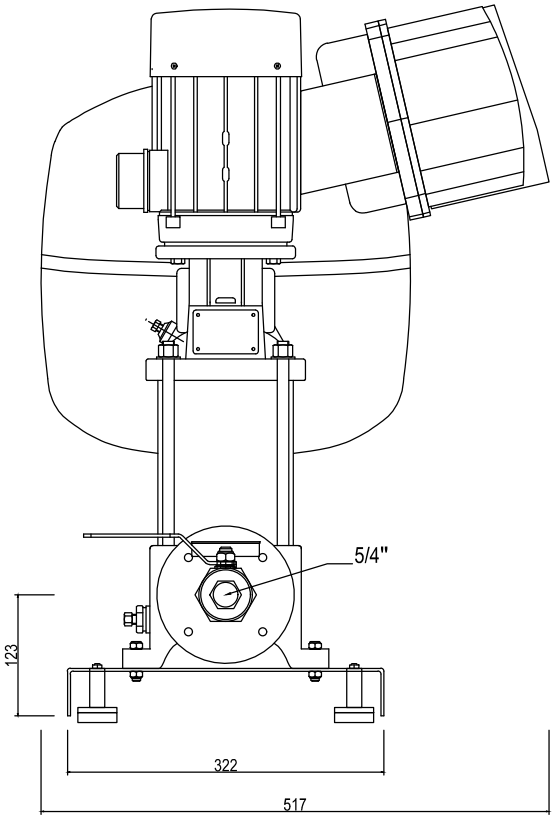

FGJ(DIN-ANSI-JIS) PN25(DN32) /mm/

BATS-E CVE 2-11

PUMPS	13.11.2020	BAKALÁR PUMPS®
Textilná 3/A		
040 12 Košice		