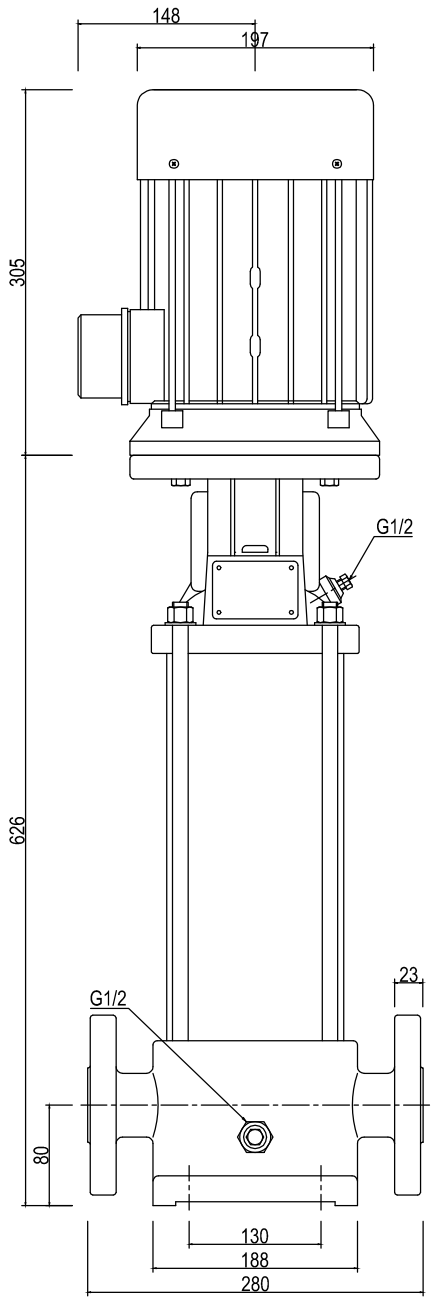


FGJ(DIN-ANSI-JIS)
PN25(DN32)
/mm/

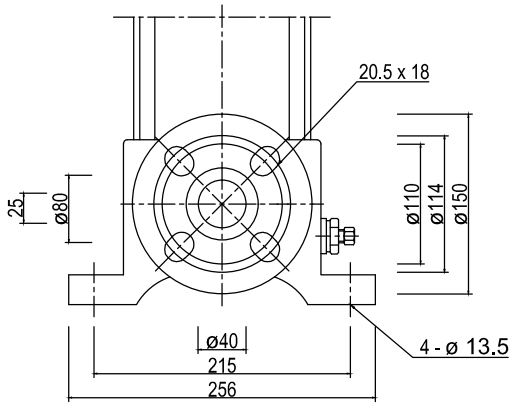


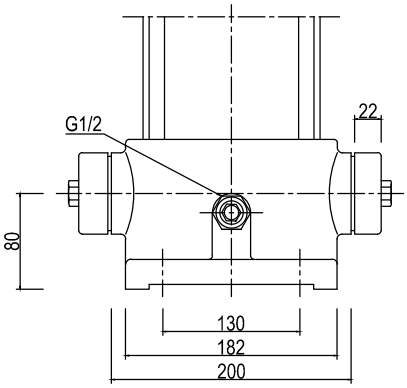


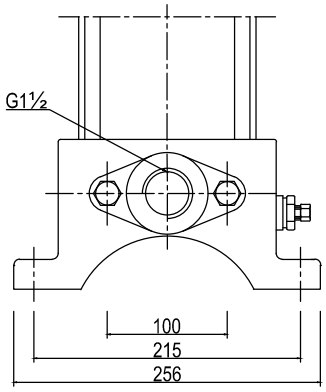


BV 10-10

| | | |
|---|---|---|
| PUMPS | 07.07.2020 | BAKALÁR PUMPS® |
| Textilná 3/A | | |
| 040 12 Košice | | |